MJ Instruments

water monitoring solution

MJ-WQA Series Water Quality Analyzer

The MJ-WQA Series water quality analyzers are designed and manufactured by MJ Instruments Private Limited. Equipped with high-end CPU and a precise signal processor which greatly reduce signal fluctuation, improving the data stability and accuracy. The compartments are carefully designed so that both water and electrical components are separated to ensure long operation life of the analyzers.

MJ-WQA100

Features:

Easy to Operate

- Touch-screen control
- User friendly
- Real-time data trend

Easy to Maintain

- Self-cleaning
- Low water consumption
- Low sample volume require
- Low reagent consumption
- Easy tube replacement

MJ-WQA200

Upgraded Functionality

- Power-saving valves
- Precise volume control
- Multiple access security
- On-board data logging
- Alarm logging

Customizable Selection

- Measurement range
- Housing material
- Signal output
- Up to 4 parameters
- 2 Analysis simultaneously
- Dual intake points

MJ-WQA300

Automation Made Easy

- Automated Calibration at User Defined Interval
- Automated Measurement at User Defined Interval
- Automated cleaning at end of each cycle and power up
- Automated sample rinse at start of each cycle
- Alarm trigger upon abnormal operation

50 Proxima, Gambas Crescent #10-43, Singapore 757022 | admin@mj-instruments.com | (+65) 9010 8859

MJ Instruments

MJ-WQA Series

Specification:

Security Management	:	3 access account layer (user, admin, super-admin)
Measurement Control	:	Manual, Automatic
Measurement Interval	:	User defined (real-time clock, time interval, signal trigger)
Calibration Interval	:	User defined (real-time clock, time interval, signal trigger)
Accuracy	:	±5%
Zero Point Drift	:	5%
Range Point Drift	:	5%
Signal Ouput	:	4-20mA, RS232/RS485 Modbus
Fluid Level Alert	:	High limit and low limit (reagent, sample, DI water, standard)
Abnormality Alert	:	Concentration, calibration, heating, leak
Sample Pressure	:	Atmospheric
Waste Pressure	:	Atmospheric
Reagent Storage	:	10 - 30°C
Reagent Replacement	:	3 - 4 weeks (depend on storage temperature)
Operating Temperature	:	5 to 40°C
IP Rating	:	IP55
MTBF	:	> 720hr
Display	:	Colour touchscreen
Languages	:	English, Chinese (Traditional, Simplified)
Power Input	:	AC 220V/110V±10% 50/60Hz, DC12V

Application:

- Reservoir, Rivers, Lakes
- Wastewater Plant
- Desalination Plant
- Groundwater
- Seawater
- Rainwater
- Pollution Detection
- Research Studies

Optional:

- Dual In-take
- Reagent Cooling System
- System Alert System
- Dilution System
- Sample Pretreatment

** Refer to indivdual parameter for detailed spec

50 Proxima, Gambas Crescent #10-43, Singapore 757022 | admin@mj-instruments.com | (+65) 9010 8859

MJ-WQA Series

Dimensional Drawing (Polyethylene Housing):

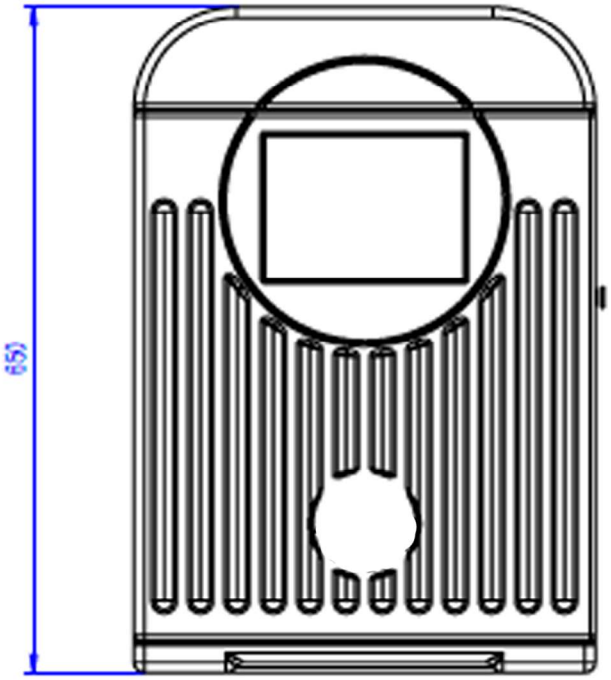

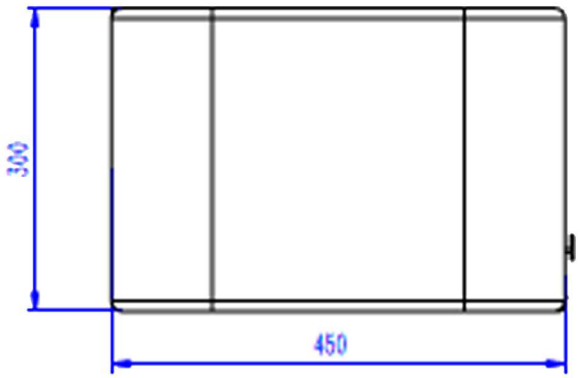

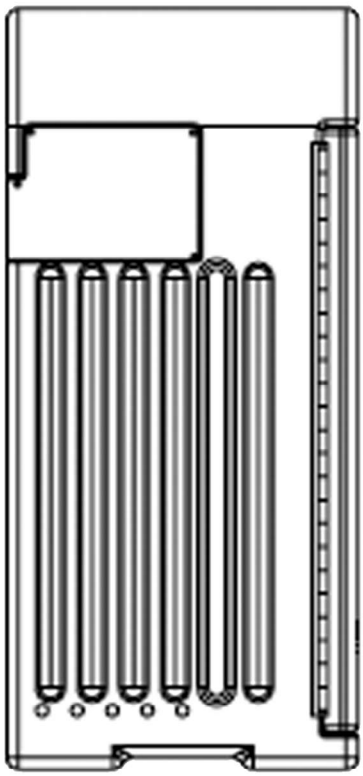

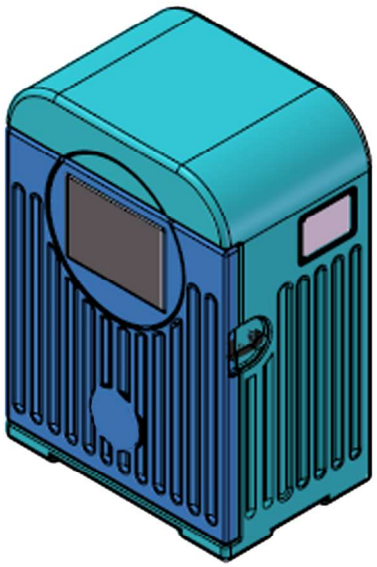

50 Proxima, Gambas Crescent #10-43, Singapore 757022 | admin@mj-instruments.com | (+65) 9010 8859

MJ-WQA Series

Dimensional Drawing (Metal Housing):

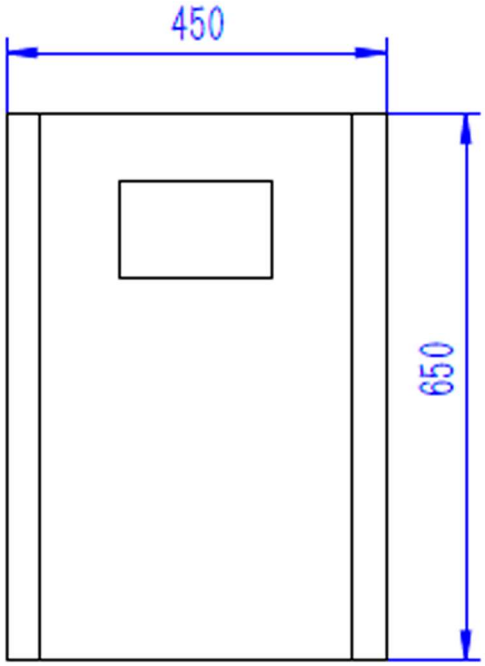

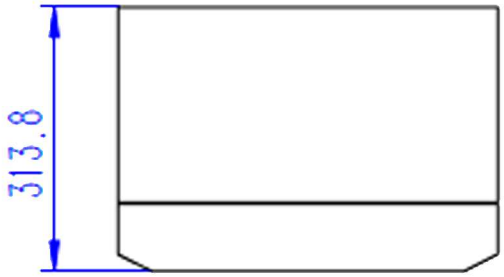

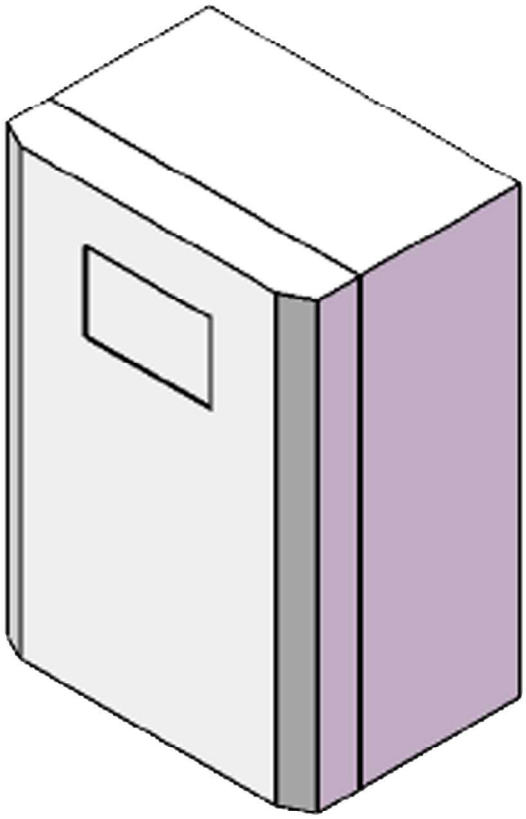

50 Proxima, Gambas Crescent #10-43, Singapore 757022 | admin@mj-instruments.com | (+65) 9010 8859

MJ-WQA Series

Dimensional Drawing (Cabinet Housing):

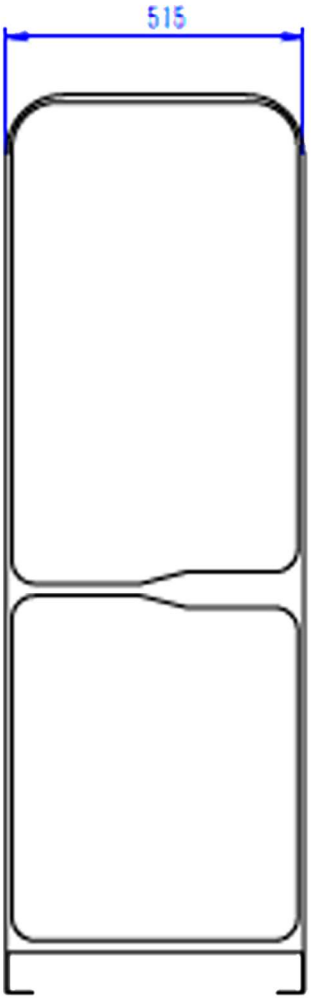

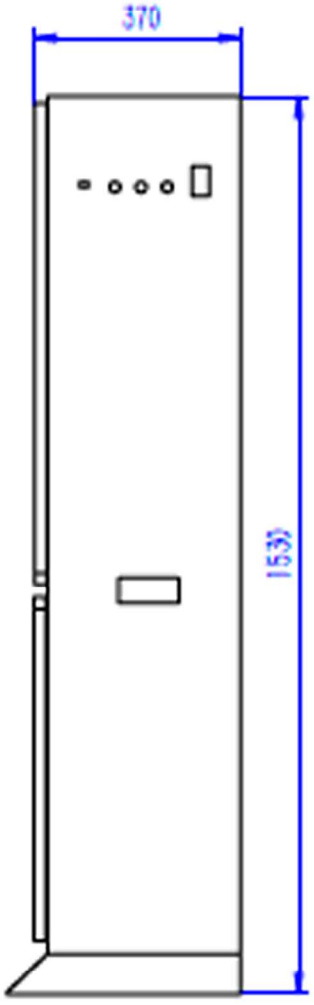

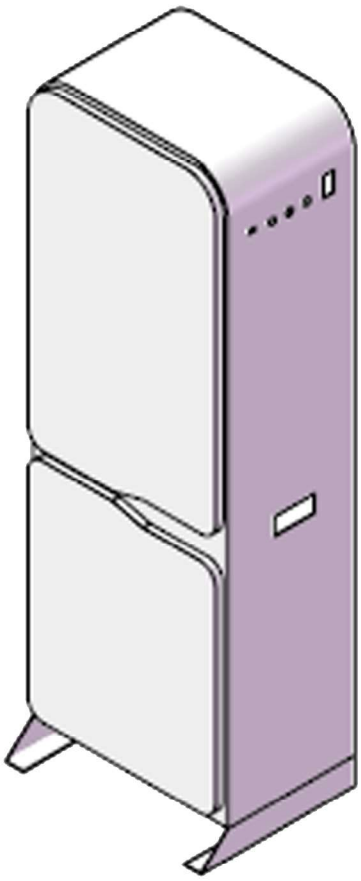

50 Proxima, Gambas Crescent #10-43, Singapore 757022 | admin@mj-instruments.com | (+65) 9010 8859

MJ-WQA Available Parameters

- Acetone Oxime
- Aluminum Ion / Total Aluminum
- Ammonia
- Aniline
- Anionic Surfactant
- Antimony Ion / Total Antimony
- Arsenic Ion / Total Arsenic
- Boron
- Bromate
- Bromide
- Cadmium Ion / Total Cadmium
- Chemical Oxygen Demand
- Chloride Ion
- Chromium III
- Chromium ion / Total Chromium
- Chromium VI
- Cobalt Ion / Total Cobalt
- Copper Ion / Total Copper
- Cyanide Ion / Total Cyanide
- Electroplating (Nickel)
- Fluoride Ion
- Free Acidity
- Free Alkalinity
- Hydrazine
- Iron Ion / Total Iron
- Lead Ion / Total Lead
- Manganese Ion / Total Manganese
- Nickle Ion / Total Nickel
- Nitrate
- Nitrite
- Phenol
- Residual Chlorine
- Selenium Ion / Total Selenium
- Silicate
- Silver Ion / Total Silver
- Sodium Ion
- Sulfate
- Sulfide
- Total Acidity
- Total Alkalinity
- Total Chlorine
- Total Hardness
- Total Nitrogen
- Total Organic Compound
- Total Phosphorus
- Volatile Phenol
- Zinc Ion / Total Zinc

50 Proxima, Gambas Crescent #10-43, Singapore 757022 | admin@mj-instruments.com | (+65) 9010 8859

Parameter Specifications

Acetone Oxime

Measurement Method	:	Phenanthroline Colorimetric
Measurment Range	:	0.01 - 2 mg/L (other range available)

Aluminum Ion / Total Aluminum

Measurement Method	:	Chromocyanine R Colorimetric
Measurment Range	:	0.01 - 1 mg/L (other range available)

Ammonia

Measurement Method	:	Salicylic Acid Colorimetric
Measurment Range	:	0.01 - 0.5/5/20/50/100 mg/L (other range available)

Measurement Method	:	Ion Selective Electrode (ISE)
Measurment Range	:	0.01 - 100 mg/L (other range available)

Measurement Method	:	Phenol Colorimetric
Measurment Range	:	0.01 - 0.5/5/20/50/100 mg/L (other range available)

Aniline

Measurement Method	:	N-(1-Naphthyl) Ethylenediamine Azo Colorimetric
Measurment Range	:	0.01 - 2 mg/L (other range available)

Anionic Surfactant

Measurement Method	:	3, 5-Br2-PADAP Colorimetric
Measurment Range	:	0.01 - 1 mg/L (other range available)

Antimony Ion / Total Antimony

Measurement Method	:	3, 5-Br2-PADAP Colorimetric
Measurment Range	:	0.01 - 1 mg/L (other range available)

Arsenic Ion / Total Arsenic

Measurement Method	:	Silver Salt Colorimetric
Measurment Range	:	0.01 - 1 mg/L (other range available)

50 Proxima, Gambas Crescent #10-43, Singapore 757022 | admin@mj-instruments.com | (+65) 9010 8859

Parameter Specifications

Boron

Measurement Method	:	Azomethine-H Acid Colorimetric
Measurment Range	:	0 - 2/50 mg/L (other range available)

Bromate

Measurement Method	:	Phenothiazine Colorimetric
Measurment Range	:	0.01 - 1 mg/L (other range available)

Bromide

Measurement Method	:	Phenol Red Colorimetric
Measurment Range	:	0.01 - 1 mg/L (other range available)

Cadmium Ion / Total Cadmium

Measurement Method	:	TPPS Colorimetric
Measurment Range	:	0.01 - 1 mg/L (other range available)

Chemical Oxygen Demand

Measurement Method	:	Ultraviolet
Measurment Range	:	0.01 - 20/100 mg/L (other range available)

Measurement Method	:	Potassium Permanganate Colorimetric
Measurment Range	:	0.05 - 10 mg/L (other range available)

Measurement Method	:	Potassium Dichromate Colorimetric
Measurment Range	:	10 - 5000 mg/L (other range available)

Chloride Ion

Measurement Method	:	Mercury Thiocyanate (II) Colorimetric
Measurment Range	:	0 - 1000 mg/L (other range available)

Chromium III

Measurement Method	:	Diphenylcarbazide Colorimetric
Measurment Range	:	0.01 - 1 mg/L (other range available)

Chromium ion / Total Chromium

Measurement Method	:	Diphenylcarbazide Colorimetric
Measurment Range	:	0.01 - 1 mg/L (other range available)

Chromium VI

Measurement Method	:	Diphenylcarbazide Colorimetric
Measurment Range	:	0.01 - 1 mg/L (other range available)

50 Proxima, Gambas Crescent #10-43, Singapore 757022 | admin@mj-instruments.com | (+65) 9010 8859

MJ Instruments

Parameter Specifications

Cobalt Ion / Total Cobalt

Measurement Method	:	Nitroso R Salt Colorimetric
Measurment Range	:	0.01 - 1 mg/L (other range available)

Copper Ion / Total Copper

Measurement Method	:	Dicyclohexanone Oxalyl Dihydrazone Colorimetric
Measurment Range	:	0.01 - 1 mg/L (other range available)

Cyanide Ion / Total Cyanide

Measurement Method	:	Pyridine-barbituric Acid Colorimetric
Measurment Range	:	0.01 - 1 mg/L (other range available)

Electroplating (Nickel)

Measurement Method	:	Colorimetric
Measurment Range	:	0 - 200 mg/L (other range available)

Fluoride Ion

Measurement Method	:	Fluorine Reagent Colorimetric
Measurment Range	:	0.01 - 20 mg/L (other range available)

Measurement Method	:	Ion Selective Electrode
Measurment Range	:	0.01 - 10/100 mg/L (other range available)

Free Acidity

Measurement Method	:	Bromophenol Blue + Sodium Hydroxide Titration
Measurment Range	:	0 - 50 (other range available)

Free Alkalinity

Measurement Method	:	Phenolphthalein + Hydrochloric Acid Titration
Measurment Range	:	0 - 50 (other range available)

Hydrazine

Measurement Method	:	P-Dimethylaminobenzaldehyde Colorimetric
Measurment Range	:	0.01 - 2 mg/L (other range available)

Iron Ion / Total Iron

Measurement Method	:	TPTZ Colorimetric
Measurment Range	:	0.01 - 1 mg/L (other range available)

50 Proxima, Gambas Crescent #10-43, Singapore 757022 | admin@mj-instruments.com | (+65) 9010 8859

Parameter Specifications

Lead Ion / Total Lead

Measurement Method	:	TPPS Colorimetric
Measurment Range	:	0.01 - 1 mg/L (other range available)

Manganese Ion / Total Manganese

Measurement Method	:	Formaldehyde Oxime Colorimetric
Measurment Range	:	0.01 - 1 mg/L (other range available)

Nickle Ion / Total Nickel

Measurement Method	:	Diacetyl Oxime Colorimetric
Measurment Range	:	0.01 - 1 mg/L (other range available)

Nitrate

Measurement Method	:	NED + SAA Colorimetric
Measurment Range	:	0.01 - 0.5/5/20/50 mg/L (other range available)

Nitrite

Measurement Method	:	NED + SAA Colorimetric
Measurment Range	:	0.01 - 0.5/5/20/50 mg/L (other range available)

Phenol

Measurement Method	:	Potassium Terricyanide, 4-Aminoantipyrine Colorimetric
Measurment Range	:	0.01 - 5 mg/L (other range available)

Phosphate

Measurement Method	:	Molybdate Ascorbic Acid Colorimetric
Measurment Range	:	0.01 - 0.5/5/20/50 mg/L (other range available)

Residual Chlorine

Measurement Method	:	DPD Colorimetric
Measurment Range	:	0.01 - 2 mg/L (other range available)

Selenium Ion / Total Selenium

Measurement Method	:	Colorimetric
Measurment Range	:	0.01 - 1 mg/L (other range available)

Silicate

Measurement Method	:	Silicon Molybdenum Blue Colorimetric
Measurment Range	:	0.01 - 20 mg/L (other range available)

50 Proxima, Gambas Crescent #10-43, Singapore 757022 | admin@mj-instruments.com | (+65) 9010 8859

Parameter Specifications

Silver Ion / Total Silver

Measurement Method	:	3,5-Br2-PADAP Colorimetric
Measurment Range	:	0.01 - 1 mg/L (other range available)

Sodium Ion

Measurement Method	:	Ion Selective Electrode
Measurment Range	:	0.01 - 100 mg/L (other range available)

Sulfate

Measurement Method	:	Barium Chloride Turbidimetric
Measurment Range	:	0.01 - 20/100 mg/L (other range available)

Sulfide

Measurement Method	:	Dimethyl-P-Phenylenediamine + Terric Chloride Colorimetric
Measurment Range	:	0.01 - 2 mg/L (other range available)

Total Acidity

Measurement Method	:	Phenolphthalein + Sodium Hydroxide Titration
Measurment Range	:	0 - 50 (other range available)

Total Alkalinity

Measurement Method	:	Bromophenol Blue + Hydrochloric Acid Titration
Measurment Range	:	0 - 50 (other range available)

Total Chlorine

Measurement Method	:	DPD Colorimetric
Measurment Range	:	0.01 - 2 mg/L (other range available)

Total Hardness

Measurement Method	:	Colorimetric
Measurment Range	:	0.01 - 10 mg/L (other range available)

Total Nitrogen

Measurement Method	:	NED + SAA Colorimetric
Measurment Range	:	0.01 - 1 mg/L (other range available)

50 Proxima, Gambas Crescent #10-43, Singapore 757022 | admin@mj-instruments.com | (+65) 9010 8859

Parameter Specifications

Total Organic Compound

Measurement Method	:	Ultraviolet
Measurment Range	:	0.01 - 20/100 mg/L (other range available)

Measurement Method	:	NDIR
Measurment Range	:	0.01 - 20/100 mg/L (other range available)

Total Phosphorus

Measurement Method	:	Molybdate Ascorbic Acid Colorimetric
Measurment Range	:	0.01 - 1 mg/L (other range available)

Volatile Phenol

Measurement Method	:	4-Aminoantipyrine Colorimetric
Measurment Range	:	0.01 - 1 mg/L (other range available)

Zinc Ion / Total Zinc

Measurement Method	:	Zincon Colorimetric
Measurment Range	:	0.01 - 1 mg/L (other range available)

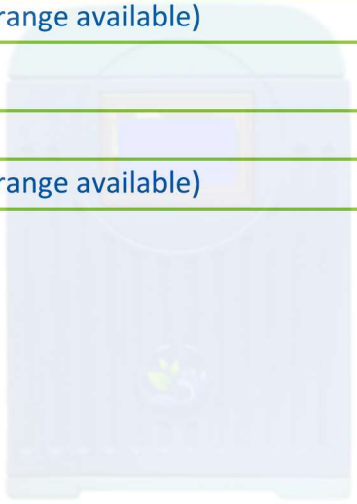

50 Proxima, Gambas Crescent #10-43, Singapore 757022 | admin@mj-instruments.com | (+65) 9010 8859